Hangcha Europe GmbH
Mariechen-Graulich-Straße 12a
65439 Flörsheim am Main
Deutschland

Tel.: +49 6145 3769166
E-Mail: admin@hangchaeurope.com

www.hangchaeurope.com

Folgen Sie uns auf Instagram

Folgen Sie uns auf Facebook

Folgen Sie uns auf YouTube

"Hangcha Forklift" App herunterladen

ISO14001:2015

ISO9001:2015

HANGCHA trucks conform to the European Safety Requirements.

HANGCHA Group Co., LTD behält sich das Recht vor, Änderungen bezgl. Farbe, Spezifikationen, Ausstattung und sonsstige Details, dierer Bröschüre ohne Vorankündigung vorzunehemn. Fahrzeugfarben können von den Farben in dieser Brochure abweichen.

2026 VERSION 1/COPYRIGHT 2026/03



X Series IC Forklift Truck

with capacities of 12,000 to 16,000kg

The World of Hangcha

X SERIES
IC FORKLIFT TRUCK

Professional industrial exterior design, high product recognition, compact and smooth modelling, modern industrial aesthetics. The concealed arrangement of exposed parts makes the exterior cleaner and neater.

The key parts of the old products have been verified to be reliable and durable by the market for many years, and with modular and standardized design, the main parts are verified step by step in advance, so that the vehicle is highly mature. Structural parts such as the frame, mast, etc. are upgraded and optimized on the basis of existing products, and are verified through CAE analysis and testing.

The degree of digitization is improved. With bus architecture and several built-in diagnosis and management functions, a central controller is added to the vehicle to enable a central fault alarm, simplified operations, easy diagnosis and flexible configuration of electrical functions.

STAGE V & TIER 4F

HANGCHA with you at every stage

E¸cien t, reliable solutions for your demands

With Hangcha you can meet all Stage V/Tier 4f emissions standards which provides customer demands for value, innovation and performance. The technologies include common rail fuel systems, Turbocharged Inter-cooled selective catalytic reduction (SCR), diesel oxidation catalysts (DOC) and diesel particulate filters (DPF). Designed and optimised to every engine model, our forklift truck maximises efficiency and reliability.

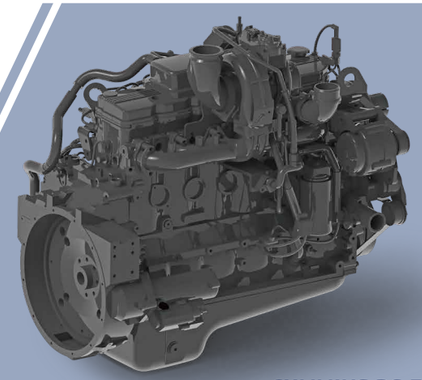

CUMMINS B6.7



OKAMURA gear box with micro-electronic control provides for two-shift power shifting, travelling is stable and accurate.



Optional imaging system with front and rear camera, increasing the safety greatly.



Thanks to the unique design, cab can be tilt without any tools, major service items can be reached easily by tilting the cabin, maximized access is possible.



Excellent all round visibility is achieved by the overall design.



Battery compartment is easy to open for easy maintenance.



The newly designed LCD instrument has more comprehensive functions and more stable performance. It can display the important information such as truck status and engine faults... So that the operator can understand the truck status more intuitively and facilitate maintenance.



Suspended seat with fingertip system that can be easily adjusted to suit each customer.



Heavy-duty traction axle, two-stage deceleration; Wet brake, maintenance-free; Hydraulic release spring action parking brake, safe and reliable.



Fully-suspended all-round vision cab

The new fully-suspended all-round vision cab (HPC) and optimized vehicle outline enable all-round sight and view. Performance of the air conditioner is improved to enable uniform conditioned air blowing from the air outlet and a strong cooling effect. The waterproof, dust-proof, heatproof, soundproof, noise-reducing sealing design improves driving comfort. The molded interior parts enable a more comfortable feel. The integral frame is constituted by profiled steel pipes. The structural parts have higher strength.







Comfort

The compact integral joystick enables accurate remote control. The optimized hydraulic braking curve enables smooth easy-to-control braking. The suspended seat and ergonomically-movable multidirectional adjustable console enable comfortable control.

High Performance

The configuration is improved. A new cab, wet braking drive axle, hydraulic adjustable fork, LCD bus instruments, cooling and heating air conditioner, vehicle LED lights, snail horn and reversing radar and other equipment are provided for the standard configuration. With reserved design, the optional equipment is greatly increased.

Performance is improved and the average operation efficiency is increased by more than 10%.

The overturnable cab, wide-opened hood, devices enable easy access to the oil and water, and the easy-to-dismount large electric control cover plate, make maintenance more convenient.



Comfort

The fully-suspended seat, ergonomic steering wheel and control platform make driving a pleasure.

Safety

A wide view reduces hidden safety hazards caused by blind corners when the vehicle is driving. A spindle and a hydraulic self-locking mechanism are used to connect the cab and the vehicle frame. When the electric or manual hydraulic pump is started, the hydraulic lock is automatically opened and at the same time, the hydraulic cylinder at the bottom of the cab sticks out so that the cab is flipped sideways over the center of gravity, improving the dimension. Safety and convenience of maintenance are improved.

Ergonomic Design

The steering wheel, joystick, control buttons, pedals and seat are all ergonomically designed for easier operation.

Overall Effect

The fully enclosed suspended cab has a curved front window that enables a large viewing angle and has its sides cut in a way di˝ erent from that for the prior window. The cab doors are all glass, which increases the overall visual range. The exterior design of the whole vehicle is at the forefront of the development of forklift design. Being sturdy and elegant in appearance, the vehicle is practical and stylish. The integrated interior design is simple and comfortable, presenting visual enjoyment to the driver.

Features

Transmission	Standard	Options
Pneumatic tyre	●	
Solid tyre		○
Steering system		
Fully hydraulic power steering	●	
Centralized lubrication system (machine)		○
Automatic Lubrication System		○
Power system		
Extended exhaust pipe	●	
Lockable fuel cap		○
Spark arrester		○
Truck		
Tow pin	●	
Electrostatic discharge chain		○
Rear-view mirror on right & left mudguards	●	
Operating system		
Integrated joystick	●	
Adjustable steering column	●	
Adjustable armrest	●	
Hydraulic system		
Four-way hydraulic valve	●	
Cab		
Cabin	●	
Climate control system (air-conditioning and heater)	●	
Manual tilting cabin	●	
Electric tilting cabin		○
Radio	●	
Sunshade	●	
USB charging interface	●	
Clothes hanger hook	●	
Reading light	●	
1 x 24V power supply		○
1 x 12V power supply		○
License plate frame		○
Fan	●	
Lifting components		
Duplex mast	●	
Standard lifting height	●	
Optional lifting height		○
Standard fork	●	
Other fork specifications		○
Fork hook on type		○
Hydraulic Fork Positioning	●	
Independently-adjustable fork	●	
Built in Sideshift		○
Integrated sideshift		○
Emergency descent		○
Other		
Standard color	●	
User defined colour		○
Fire extinguisher (2kg/4kg)		○
Vehicle toolkit	●	
FIMS(Fleet intelligent management system)	●	
Heating pack for the cold region		○

Electrical System	Standard	Options
Operator Presense System (OPS) with buzzer	●	
LCD display screen	●	
Main power switch	●	
Emergency power o˝ switch	●	
Maintenance-free 24V lead acid battery	●	
Reverse buzzer	●	
High decible horn	●	
LED lights (entire vehicle)	●	
2 x Working light on front mudguard	●	
2 x Front working light on top of cabin	●	
2 x Rear working light on top of cabin	●	
2 x Working light on both sides of mast		○
Reverse sensor	●	
Rearview camera system	●	
Rearview camera system with memory		○
Front & rearview camera system		○
Front & rearview camera system with memory		○
4 directions camera system with single display		○
4 directions camera recording system with single display		○
In cabin CCTV		○
Rear blue safety light		○
Front and rear blue safety light		○
Three sided blue danger zone light		○
Overspeed alarm		○
Voice reverse alarm		○
Automatic fire suppression system		○
Two-way radio		○
Weight indicator in display		○
Flashing warning light (non rotating) with control switch	●	
Tyre pressure monitoring		○
On-board diagnostics system	●	
Engine fault alarm	●	
Engine oil pressure alarm indicator	●	
Air filter warning indicator	●	
Water temperature indicator	●	
Hour meter	●	
Battery charge indicator	●	
Low hydraulic pressure alarm indicator	●	
Hydraulic oil filter warning indicator	●	
Oil gauge	●	
Fuel-water separator warning indicator	●	
Oil temperature gauge	●	
Pre-heat indicator	●	
Drive mode indicator	●	
Parking brake indicator	●	
Service indicator	●	

X Series IC Forklift Truck 12-16t Specification

Distinguishing mark	1.1	Manufacturer		HANGCHA GROUP CO.,LTD.								
	1.2	Manufacturer's type designation		CPCD120-XRXW25B	CPCD120-XRXH13B	CPCD120-XRH13B	CPCD140-XRXW25B	CPCD140-XRXH13B	CPCD160-XRXW25B	CPCD160-XRXW79B	CPCD160-XRXH13B	CPCD160-XRMW25B	CPCD160-XRMH13B
	1.3	Drive: electric (battery or mains), diesel, petrol, fuel gas		Diesel	Diesel	Diesel	Diesel	Diesel	Diesel	Diesel	Diesel	Diesel	Diesel
	1.4	Operator type: hand, pedestrian, standing, seated, order-picker		Seated	Seated	Seated	Seated	Seated	Seated	Seated	Seated	Seated	Seated
	1.5	Rated capacity/rated load	Q (kg)	12000	12000	12000	14000	14000	16000	16000	16000	16000	16000
	1.6	Load centre distance	c (mm)	600	600	900	600	600	600	600	600	750	750
	1.8	Load distance, centre of drive axle to fork	x (mm)	745	745	835	825	825	825	825	825	880	880
	1.9	Wheelbase	y (mm)	3100	3100	3100	3100	3100	3100	3100	3100	3300	3300
Weight	2.1	Service Weight	kg	16000	16000	16900	18200	18200	19200	19200	19200	20300	20300
Tyres, chassis	3.1	Tyres: solid rubber, superelastic, pneumatic, polyurethane		Pneumatic	Pneumatic	Pneumatic	Pneumatic	Pneumatic	Pneumatic	Pneumatic	Pneumatic	Pneumatic	Pneumatic
	3.2	Tyre size, front		10.00-20-14PR	10.00-20-14PR	10.00-20-14PR	11.00-20-18PR	11.00-20-18PR	12.00-20-20PR	12.00-20-20PR	12.00-20-20PR	12.00-20-20PR	12.00-20-20PR
	3.3	Tyre size, rear		10.00-20-14PR	10.00-20-14PR	10.00-20-14PR	11.00-20-18PR	11.00-20-18PR	12.00-20-20PR	12.00-20-20PR	12.00-20-20PR	12.00-20-20PR	12.00-20-20PR
	3.5	Wheels, number front / rear (x = driven wheels)		4×/2	4×/2	4×/2	4×/2	4×/2	4×/2	4×/2	4×/2	4×/2	4×/2
	3.6	Tread, front	b_{10} (mm)	1780	1780	1780	1780	1780	1780	1780	1780	1780	1780
	3.7	Tread, rear	b_{11} (mm)	1890	1890	1890	1890	1890	1890	1890	1890	1890	1890
Dimensions	4.1	Tilt of mast/fork carriage forward/backward	α/β(°)	6/12	6/12	6/12	6/12	6/12	6/12	6/12	6/12	6/12	6/12
	4.2	Height, mast lowered	h_1 (mm)	3180	3180	3270	3270	3270	3290	3290	3290	3290	3290
	4.3	Free lift	h_2 (mm)	0	0	0	0	0	0	90	0	0	0
	4.4	Lift	h_3 (mm)	3000	3000	3000	3000	3000	3000	3000	3000	3000	3000
	4.5	Height, mast extended	h_4 (mm)	4695	4695	4790	4790	4790	4790	4790	4790	4790	4790
	4.7	Height of overhead cabin	h_6 (mm)	3265	3265	3265	3280	3280	3300	3300	3300	3300	3300
	4.8	Seat height relating to SIP	h_7 (mm)	1930	1930	1930	1945	1945	1965	1965	1965	1965	1965
	4.12	Coupling height	h_{10} (mm)	600	600	600	615	615	635	635	635	635	635
	4.19	Overall length	l_1 (mm)	6190	6190	6580	6260	6260	6380	6380	6380	6930	6930
	4.20	Length to face of forks	l_2 (mm)	4690	4690	4780	4760	4760	4880	4880	4880	5130	5130
	4.21	Overall width	b_1/b_2(mm)	2460/2200	2460/2200	2460/2200	2460/2200	2460/2200	2460/2200	2460/2200	2460/2200	2460/2200	2460/2200
	4.22	Fork dimensions	s/e/l (mm)	80×200×1520	80×200×1520	100×200×1820	90×200×1520	90×200×1520	90×200×1520	85×200×1520	90×200×1520	100×200×1820	100×200×1820
	4.24	Fork-carriage width	b_3 (mm)	2370	2370	2370	2370	2370	2370	2370	2370	2370	2370
	4.25	Distance between fork-arms	b_5 (mm)	520/2200	520/2200	520/2200	520/2200	520/2200	520/2200	520/2200	520/2200	520/2200	520/2200
	4.31	Ground clearance, laden, below mast	m_1 (mm)	250	250	250	250	250	270	270	270	270	270
	4.32	Ground clearance, centre of wheelbase	m_2 (mm)	310	310	310	325	325	345	345	345	345	345
	4.34.1	Aisle width with load length 1500mm	A_{st} (mm)	6800	6800	7190	6875	6875	6975	6975	6975	7630	7630
	4.34.2	Aisle width with load length 1800mm	A_{st} (mm)	7100	7100	7190	7175	7175	7275	7275	7275	7630	7630
	4.35	Turning radius	W_a (mm)	4350	4350	4350	4350	4350	4450	4450	4450	4750	4750
	4.36	Minimum pivoting point distance	b_{13} (mm)	1480	1480	1480	1480	1480	1480	1480	1480	1480	1480
Performance data	5.1	Travel speed, laden/unladen	km/h	24/28	24/28	24/28	25/29	25/29	25/29	22/27	25/29	25/29	25/29
	5.2	Lift speed, laden/unladen	m/s	0.34/0.36	0.34/0.36	0.34/0.36	0.35/0.38	0.35/0.38	0.35/0.38	0.32/0.35	0.35/0.38	0.35/0.38	0.35/0.38
	5.3	Lowering speed, laden/unladen	m/s	0.45/0.40	0.45/0.40	0.45/0.40	0.45/0.40	0.45/0.40	0.45/0.40	0.45/0.35	0.45/0.40	0.45/0.40	0.45/0.40
	5.5	Drawbar pull, laden/unladen	N	115000	115000	115000	115000	115000	115000	100000	115000	115000	115000
	5.7	Gradeability, laden/unladen	%	20	20	20	20	20	20	20	20	20	20
	5.10	Service brake		Wet disc brake	Wet disc brake	Wet disc brake	Wet disc brake	Wet disc brake	Wet disc brake	Wet disc brake	Wet disc brake	Wet disc brake	Wet disc brake
		Parking brake		spring applied, hydraulic release multi-disc brake			spring applied, hydraulic release multi-disc brake		spring applied, hydraulic release multi-disc brake			spring applied, hydraulic release multi-disc brake	
Engine	7.1	Engine manufacturer/type		QSB 6.7-C160	B6.7	B6.7	QSB 6.7-C160	B6.7	QSB 6.7-C160	QSB6.7	B6.7	QSB 6.7-C160	B6.7
	7.2	Engine power	kW	119	116	116	119	116	119	118	116	119	116
	7.3	Rated speed	r/min	2300	2200	2200	2300	2200	2300	2100	2200	2300	2200
	7.4	Number of cylinders/displacement	(-)/(cm³)	6/6700	6/6700	6/6700	6/6700	6/6700	6/6700	6/6700	6/6700	6/6700	6/6700
		Emission Std.		StageIIIA/Tier3	Stage V/Tier 4	Stage V/Tier 4	StageIIIA/Tier3	Stage V/Tier 4	StageIIIA/Tier3	StageIV/Tier4F	Stage V/Tier 4	StageIIIA/Tier3	Stage V/Tier 4
	7.9	Vehicle electrical system voltage	V	24	24	24	24	24	24	24	24	24	24
	7.10	Battery voltage/nominal capacity	V/Ah	2×12/120	2×12/120	2×12/120	2×12/120	2×12/120	2×12/120	2×12/120	2×12/120	2×12/120	2×12/120
		Rated torque	N·m/r/min	731/1500	746/1300	746/1300	731/1500	746/1300	731/1500	746/1300	746/1300	731/1500	746/1300
		Transmissions Manufacturer		Okamura	Okamura	Okamura	Okamura	Okamura	Okamura	Okamura	Okamura	Okamura	Okamura
		Transmissions Type		Y63270X	Y63270X	Y63270X	Y63270X	Y63270X	Y63270X	Y63270X	Y63270X	Y63270X	Y63270X
		Stage FWD/RVS		2/1	2/1	2/1	2/1	2/1	2/1	2/1	2/1	2/1	2/1
Addition data	10.1	Operating pressure for attachments	Mpa	15	15	15	15	15	15	15	15	15	15
	10.2	Oil volume for attachments	l/min	110	110	110	110	110	110	110	110	110	110
	10.3	Hydraulic Tank - capacity (drain & refill)	liter	320	320	320	320	320	320	320	320	350	350
	10.4	Fuel tank capacity	liter	320	320	320	320	320	320	320	320	370	370
	10.7	Sound pressure level at the driver´s seat	dB (A)	78	78	78	78	78	78	78	78	78	78

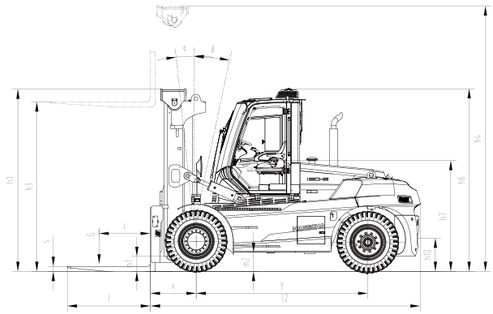

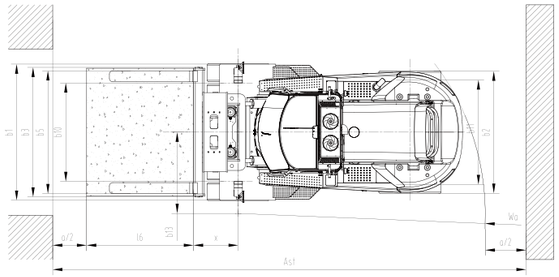

X Series IC Forklift Truck 12-16t Mast:(Pneumatic)

Type	Model	Max. fork height	Overall height				Tilt Range	Capacity			
			Lowered		Extended		F/R	Load capacity at 600mm	Load capacity at 600mm	Load capacity at 600mm	Load capacity at 750mm
			12t	14t/16t	12t	14t/16t		12t	14t	16t	16t
		mm	mm	mm	mm	mm	(°)	kg	kg	kg	kg
Wide view mast	GXRX120/160/161M300	3000	3180	3290	4695	4790	6/12	12000	14000	16000	16000
	GXRX120/160/161M330	3300	3330	3440	4995	5090	6/12	12000	14000	16000	16000
	GXRX120/160/161M360	3600	3480	3590	5295	5390	6/12	12000	14000	16000	16000
	GXRX120/160/161M400	4000	3680	3790	5695	5790	6/12	12000	14000	16000	16000
	GXRX120/160/161M430	4300	3880	3990	6030	6140	6/12	12000	14000	16000	16000
	GXRX120/160/161M450	4500	3980	4090	6230	6340	6/12	12000	14000	16000	16000
	GXRX120/160/161M480	4800	4130	4240	6530	6640	6/6	12000	14000	16000	16000
	GXRX120/160/161M500	5000	4230	4340	6730	6840	6/6	12000	14000	16000	16000
	GXRX120/160/161M550	5500	4530	4640	7280	7390	3/6	10500	12500	14500	14500
	GXRX120/160/161M600	6000	4780	4890	7780	7890	3/6	9000	11000	13000	13000
	GXRX120/160/161M650	6500	5080	5190	8330	8440	3/6	7500	9500	11500	11500

